Block Model Approach

by Marwan Asof

Submission date: 12-Mar-2023 06:27PM (UTC+0700)
Submission ID: 2035105313
File name: NurlyGofar2010_BlockModelApproachforAnalysis.pdf (249.03K)
Word count: 3217
Character count: 16482

Malaysian Journal of Civil Engineering 22(1) : 119-132 (2010)

BLOCK MODEL APPROACH FOR ANALYSIS OF ROCK BENCH STABILITY IN OPEN PIT MINES

Marwan Asof[1*], Nurly Gofar[2]

[1]*Faculty of Engineering, Sriwijaya University, Kampus Unsri Indralaya, Palembang, Indonesia*
[2]*Faculty of Civil Engineering, Universiti Teknologi Malaysia, 81310 UTM Skudai, Johor, Malaysia*

[*]Corresponding Author*: marwan_asof@yahoo.com*

Abstract : Wedge failure analysis conventionally adopted for the design of global angle of open pit mines is not always applicable when the area consists of jointed rock benches. In this analysis, the unstable wedge is assumed intact while, in fact, the rock bench consists of an assemblage of blocks generated by the intersections of well-defined discontinuities. Block model approach adopted in *Resoblok* provides an alternative solution for the design and stability analysis of a rock bench. The model analyzes the stability of individual block by limit equilibrium method while the discontinuity aspect is considered statistically based on geometrical modelling of the individual fractured rock mass. This paper presents the stability analysis of five rock benches from two mining sites. The analysis shows that *Resoblok* model provides a good indication of the distribution, the number and the volume of unstable blocks; therefore, it is useful for the design of open pit mines. The result of this study is in good agreement with field observation.

Keywords : *Block Model; Bench Stability; discontinuities; geometrical model; geomechanial model; unstable block volume, Resoblok*

1.0 Introduction

The design of global slope gradient in open pit mining is aimed at sufficiently eliminating all risk of failure in macro scale. Wedge failure analysis (Hoek and Bray, 2001) is commonly adopted for the design. The method considers the stability of rock mass on an identified failure plane based on general form of the geological strata; therefore, it provides only the global stability of the slope. In this method, the unstable rock wedge is assumed intact and the whole wedge moves along the identified failure plane. Mean values of rock parameters are used in the analysis.

The gradient of the slopes are determined in such a way that the factor of safety (FOS) for sliding along the identified failure plane is greater than design criteria. The FOS selected in mining engineering activities is usually lower than that used in civil engineering field due to the short-term design life of the mines. However; in the long run, the stability of the slope should be ensured by implementation of regular inspection of surface and subsurface drainage and mitigation measures to limit the effect of blasting activities.

Although the deterministic approach used in the conventional method is suitable for intermediate to high slopes, they are not well adapted for evaluating the risks relating to failures at the benches scale. The failure wedge considered in the conventional method actually consists of an assemblage of blocks comprising some discontinuities, fractures and benches. The presence of discontinuities influences the risk of failure of the rock mass depending on the characteristics, orientation of the discontinuities and the nature of rock structure. Furthermore, the possibility of rock falls is minimized by the formation of horizontal berms or installation of local reinforcement as soon as any sign of instability is identified.

Wedge failure analysis gives the largest unstable volume for a single failure (Figure 1a) but incapable of explaining the occurrence of several failures of rock mass with smaller volume (Figure 1b). Therefore, it is necessary to take into account the spatial distribution of the discontinuities, their persistence, and the probable volumes of unstable rock mass.

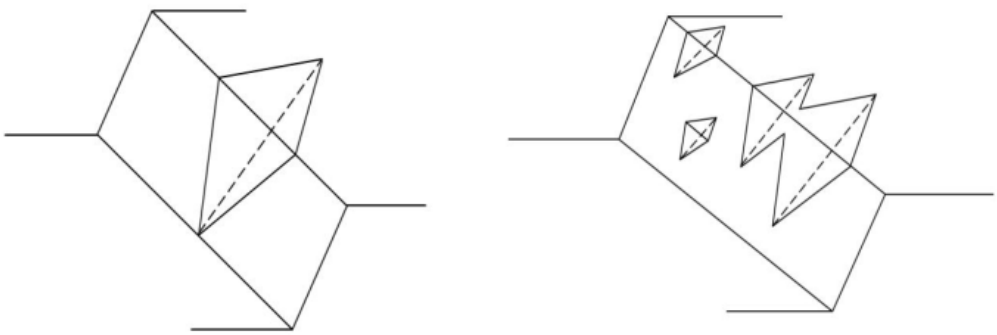

a : Classical method - Single wedge *b: Actual bench with wedges of various sizes*

Figure 1: Failure suggested by classical method as compared to possible failure of actual bench (Asof, 1991)

The state of instability is directly related to the probability of rock falls, during blasting or during loading of the mined materials, which can endanger workers within the area. Therefore; it is important to distinguish different state of stability of rock blocks to represent dangerous and safe situations. Qualitative analysis has been proposed by Ngot Kongolo (1990) for the prediction of the stability of rock benches based on field observation (Table 1 and Figure 2). This qualitative analysis is useful for the prediction of the spatial frequency of the failures of rock benches and the volumes of the failure mass.

Table 1 Qualitative assessment of stability of rock bench (Ngot Kongolo, 1990)

No	Condition	Observation	State
1	Stable	No fallen block observed on berm at the toe	Very good
2		Some isolated blocks found on the berm	Good
3		Large number of blocks found on the berm	Medium
4	Unstable	Crumbling of the benches	Bad

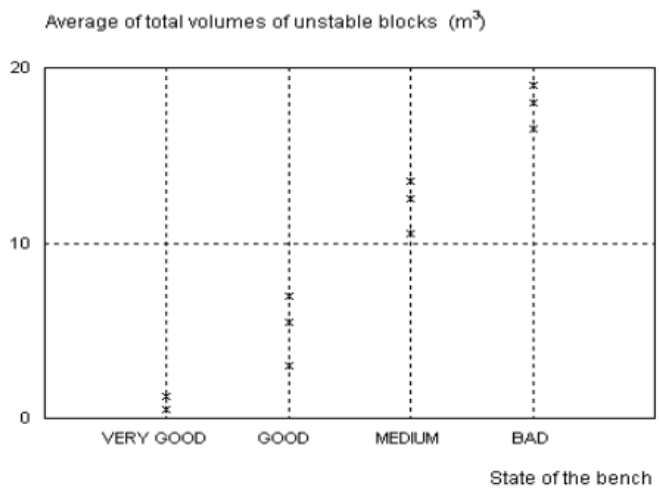

Figure 2 : Qualitative analysis of benches based on the field observation of total volume of unstable block (Ngot Kongolo, 1990)

The stability of the rock bench in surface mining activities involves uncertainties related to many factors i.e. the discontinuous nature of the rock mass due to the prevailing geological discontinuities as well as the geometrical condition of the rock bench itself. Rather than applying a FOS to each small wedges, it seems more realistic to adopt probabilistic approach and thus to reason in terms of total volume having a certain probability value of being exceeded. Therefore, statistical prediction on the relevant parameters is required to give a better insight into the actual condition of the bench, hence giving a reliable prediction of instability. The probabilistic approach is more readily accepted in engineering context from technical and legal point of view because the results do not exclude the possibility of certain failures to occur at the mine benches (Baghfi and Verdel, 2004; Gasc-Barbier *et al*., 2008).

2. 0 Block model approach

Probabilistic method is adopted in block model originally proposed by Heliot (1998) and *Resoblok* model (Baroudi, *et. al*., 1990). The block model approach involves the structural study and statistical treatment of discontinuity in a rock mass. The model is based on key-block identification using a deterministic method (Goodman and Shi, 1985) and on the stability algorithm of Warburton (1981). The stability analysis by *Resoblok* comprises two stages i.e: (1) geometric modelling or individual fractured rock mass and to identify unstable blocks by *BG* module, and (2) stability analysis of individual block by limit equilibrium method using Mohr-Coulomb criterion to model joint behaviour by *BSA* module (Asof, 1991). Thus the distribution of unstable block can be identified and global stability of rock bench is presented as probability of failure. This method has been used for the geometric design and reinforcement of large cutting of open pit mines as well as highway bypass in France (Gasc-Barbier *et al*., 2008). The subsequent sections explain the procedure used in block model approach adopted in *Resoblok* model.

2.1 Geometric modelling of rock bench

Initially, the structure of rock mass is studied to identify major discontinuities at the bench scale such as faults, beddings and joints sets. Block generator (*BG*) module is used for the geometric modelling of the rock bench. It requires the definition of a zone of interest, defined by height, length and the width of the bench, in which the discontinuities of the rock mass will be simulated. The

discontinuities (fractures and joint sets) can be placed in a deterministic way within the zone of interest or simulated by using statistical laws in terms of orientation and spacing of the discontinuities. A number of studies (e.g. Hudson and Priest (1983) and Kabbaj *et. al.,* (1989)) have shown that for most jointed rock masses, the orientation follows *Langevin-Fisher* statistical law whereby the extension and the spacing obey *exponential* and *log-normal* laws.

The simulation of the discontinuous rock masses should follow hierarchy among the sets of fractures; hence a number of simulations are required to propose a statistical analysis of the results. In the absence of any clear hierarchy among fractures, the initial approximation would be to consider general geological conditions.

2.2 Stability analysis

The geometric modelling of the rock bench provides a group of blocks for which the stability has to be assessed. The *BSA* module was written (Asof, 1991) following the blocks generation *BG* to enable the stability analysis of a single block. The properties of the discontinuities necessary for the stability analysis using Mohr-Coulomb model are the shear strength parameters i.e. cohesion (c) and the angle of friction (ϕ'). It is common in mining engineering to assume zero cohesion in order to take into account the effect of blasting but Gasc-Barbier *et. al.* proposed to estimate cohesion based on the results of Brazilian test. The parameters are generally determined by laboratory test, empirical correlation (Barton and Bandis, 1990), or back-analysis of a local failure on the scale of a given bench (Baroudi *et. al*, 1990; Rode *et. al*, 1990; Asof, 1991).

2.3 Distribution of unstable blocks

Several simulation processes should be carried out to take into account the possible distributions of unstable blocks. The characteristic parameter of the state of stability of the bench in each simulation (i) is the total volume (v_i) of the unstable blocks. For a number (n) of simulations, the (v_i) constitutes a random variable (v) of mean (m) and standard deviation (σ). In a large number of cases (Hantz, 1988) and for a considerable number of simulations, v follows an exponential law where $m = \sigma$. Asof (1991) also demonstrated that the error relative to the estimation of m on the basis of n simulations is $2/(n+1)$.

The procedure involved in each simulation is as follows:

Let m_n the average volume of instable blocks for n simulations:

$$m_n = (v_1 + \ldots + v_i + \ldots\ldots\ldots v_n)/n \tag{1}$$

where v_i is the total volume of instable blocks for simulation number i. v_i constitutes a random variable v. For the $(n+1)^{th}$ simulation:

$$m_{n+1} = (n\ m_n + v_{n+1})/(n+1) \tag{2}$$

For an exponential law of v, with 95 % probability:

$$0 < v_i < 3\lambda \tag{3}$$

where λ is the parameter of the law estimated by m_n or

$$\lambda = m_n \tag{4}$$

From (2), (3), and (4):

$$-1/(n+1) < (m_{n+1} - m_n) / m_n < 2/(n+1) \tag{5}$$

From (5) :

$$\left| m_{n+1} - m_n \right| / m_n < 2/(n+1) \tag{6}$$

2.4 Influence of scale

The trace length of a bench cannot be defined as a distance in meters. It must be determined by two criteria: (1) the pattern of discontinuities must be homogeneous over the trace length, and (2) the length (L) to be modelled must be greater than the minimum length ($L_{\min}$) such that the mean of the total volumes of the unstable blocks m is independent of L. The statistical simulation of the fractures is not valid if the actual length of the bench is less than L_{min} because the distributions of the sets of fractures are not representative of the bench dimension. A relatively long bench must be cut into homogeneous sections.

3.0 Geometrical Model and Stability Analysis

Five rock benches were selected from two open pit mining sites for the purpose of this study. The analysis procedure performed for Bench II in this study is described in the following. Figure 3 shows a geometric representation of Bench II for which the characteristic of discontinuities described in Table 2. The table shows that join set follows *Langevin-Fisher* law. Spacing of set F1 and F5 follows normal distribution while set F2 and F3 follows *uniform* and *exponential* distribution respectively. Spacing is very important parameter because it determines the volume of unstable blocks. Spacing obtained from the outcrop is used for the geometrical model.

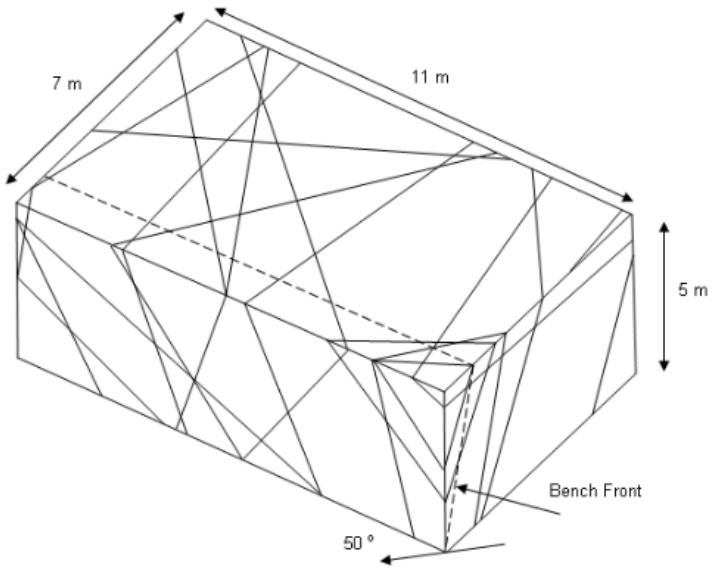

Figure 3 : Visualisation of the discontinuities network of Bench II (simulation 1)

Table 2 : Statistical Characteristics of different sets of discontinuities in rock mass shown in Figure 2 : (Bench II)

SET	Orientations		Spacings		
	Average	k *)	Average	Stand. Dev.	Adjusted law
F1	N138 W65	47	3.9	1.7	Normal
F2	N124 S28	96	4.1	1.2	Uniform (2.5;5.5)
F3	N3 W64	28	1.3	1.2	Exponent (λ= 0.77)
F5	N103 N74	55	3.4	1.8	Normal

*). Coeficient of *Langevin-Fisher*

The stability analysis of each block was performed by *BSA* module and the results are presented in terms of *m* (mean total volume). Analysis of Bench II shows that for 50 simulations, the mean (*m*) volume of rock mass is almost equal to the standard deviation (σ) as shown in Figure 4. It can be seen from the figure that *m* is actually almost equal to σ, with error less than 4 %.

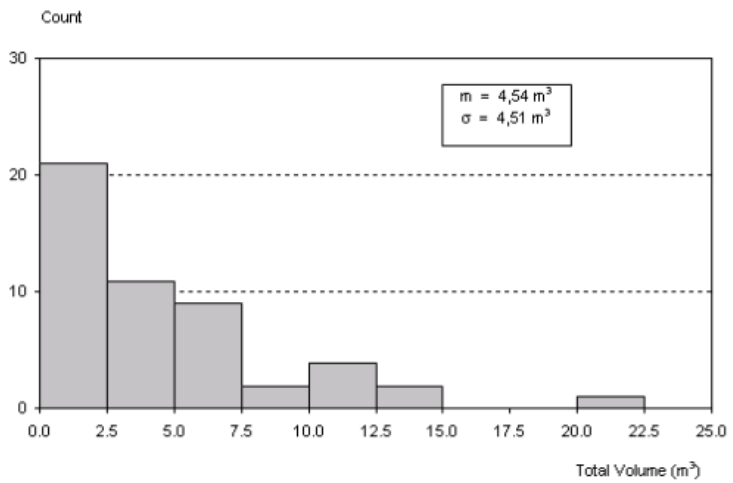

Figure 4 : Distribution of the total volume of unstable blocks for 50 simulations

Figure 5 shows the influence of the length of bench (*L*) considered in the analysis on the volume of unstable blocks (*m*). It can be seen that for *L* greater than 8m, the volume of unstable block is stable with *m* equal to 0.4*L*.

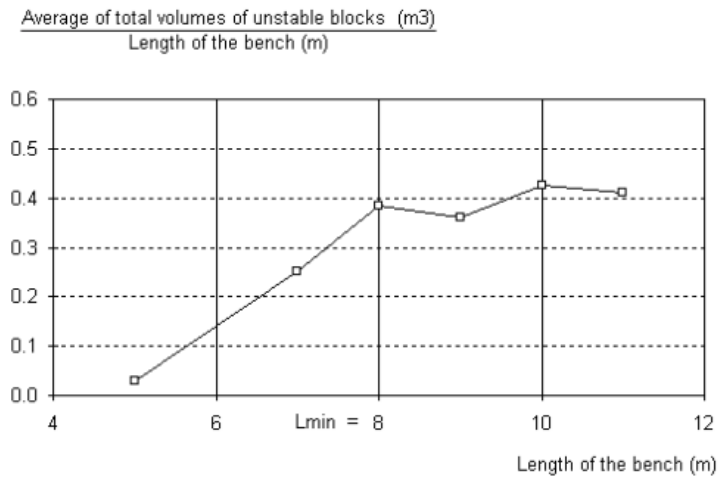

Figure 5: Effect of bench length of average volumes of unstable blocks

Figure 6 shows the position and location of the unstable blocks in Bench II with average volume of 4.54 m^3. The stability of the bench is achieved after three iteration in each simulation. This situation is in good agreement with field observation where the volume of failed wedge is about 5.30 m^3.

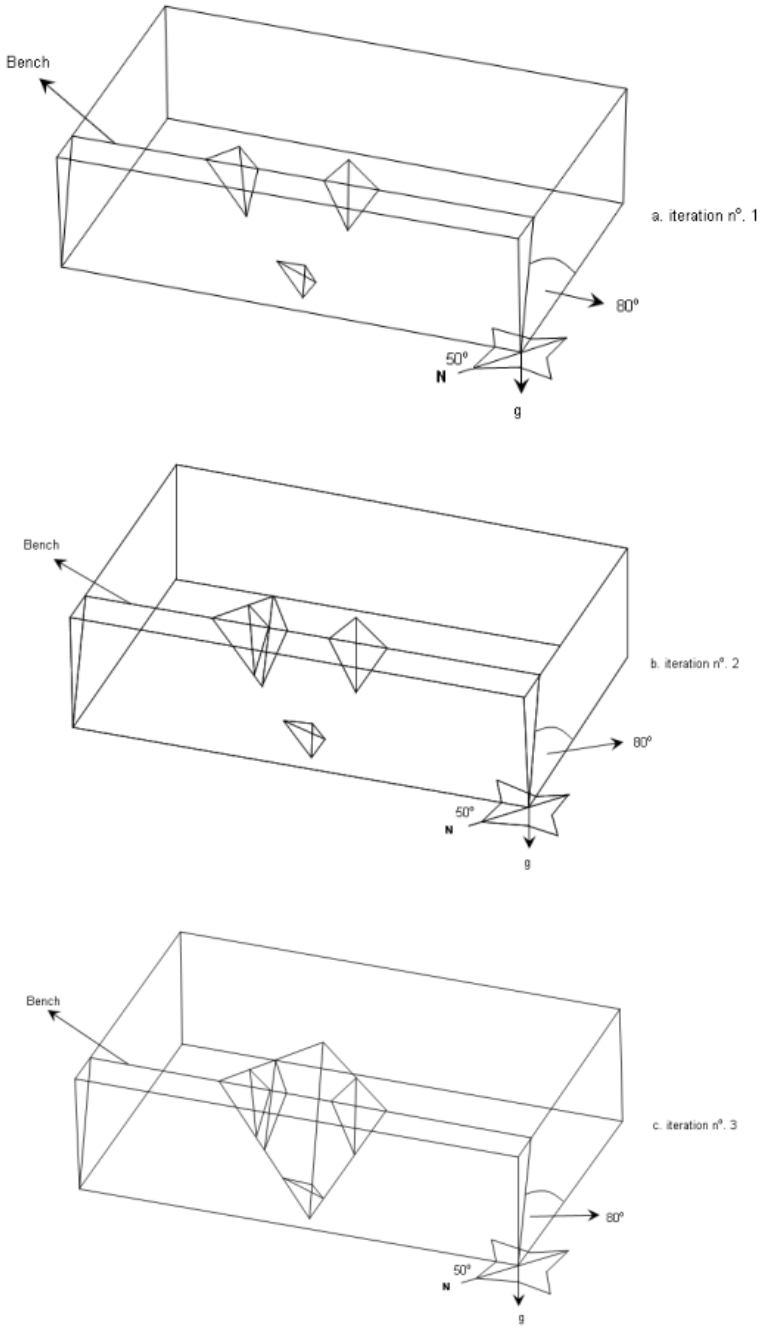

Figure 6: Visualisation of the unstable blocks on the rock bench face (simulation no. 1)

The comparison between the average volumes of unstable blocks in five benches determined by *Resoblok* and field observation together with the qualitative variable *state of bench* (Ngot Kongolo, 1990) is presented in Table 2. It can be seen that the block model adopted in *Resoblok* gives a good prediction in terms of the average volume of unstable blocks. Analysis by both *Resoblok* and field observation shows that there is no unstable blocks found in Bench I and V while very small amount of unstable block found in Bench IV; therefore, they are stable. On the other hand, Bench II and III have less than 10 m^3 unstable blocks; therefore they are in good condition. ~

Table 2 Bench conditions based on the average volume of unstable blocks

NO.	Bench Model	Average Volume of Unstable Blocks (m^3)		Bench Condition
		Block Model	Observed Instability	
1.	Bench I	0.015	none	very good
2.	Bench II	4.540	± 5.30	good
3.	Bench III	6.350	± 5.90	good
4.	Bench IV	0.120	Few unstable blocks	very good
5.	Bench V	0	none	very good

The output of geometrical and stability analysis using *Resoblok* is useful for dimensioning rock benches in terms of slope angle, orientation and height. Figure 7 shows the effect of bench angle and orientation on the volume of unstable blocks in Bench II. This analysis shows that for dip orientation of 50° and bench angle of 80°, the value of unstable block is 4.52 m^3. The value is significantly less when the bench angle is reduced to 70°. Minimum volume of unstable block is required for a good design.

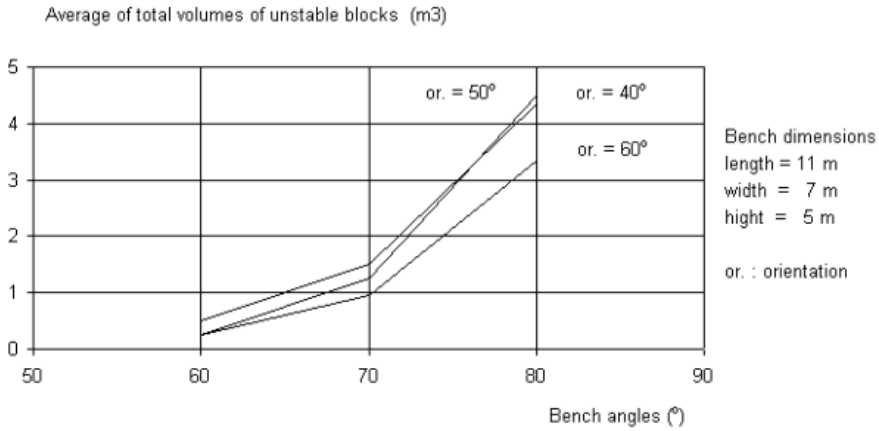

Figure 7: Optimisation of orientation and bench angles

Resoblok is also useful for identification of the location of unstable blocks (Figure 6); therefore, allows for the design of berms or reinforcement if required. A method proposed by Martin and Piteau (1978) is adopted in *Resoblok* for design of width of berm based on the distribution of the length of the heap of falling block.

5.0 Discussion and Conclusions

The stability of rock bench in in open pit mining activities involves uncertainties related to many factors i.e. the irregularities existing in the rock mass due to geological formation, fractures and cracks, as well as the geometrical condition of the rock bench itself. Block model approach adopted in *Resoblok* program is a very useful for the design of the rock bench because it is based on geometric modelling of the bench and characterisation of joint sets forming a number of blocks. Several simulations were carried out providing the volumes of unstable blocks to identify the global condition of the bench. It also provides the location of the unstable blocks; therefore it is not only useful for geometrical design but also the design of berm and slope reinforcement.

The analysis on five rock bench performed in this study indicates that *Resoblok* gives a good prediction of the failure mechanism and the dimensions of unstable blocks in terms of distribution and volume of unstable rock mass. The results suggest that the block model present a realistic result when compared to field observation.

Acknowledgement

Resoblok was developed in French research Laboratory at Nancy, France and is not currently available commercially.

References

Asof, M. (1991) *Etude de comportement mecanique des massifs rocheux fractures en blocs (methode a 1 equilibre limite) : realisation et applications.* PhD Thesis INPL – NANCY, 142 pp.

Bafghi, A.R.Y. and T. Verdel (2004) The probabilistic key-group method *Int. Journal of Numerical and Analytical Method in Geomechanics* 28:899–917

Baroudi H., J.P. Piguet, M. Asof and C. Chambon (1990) Utilization of the block generator RESOBLOK to complex geologic conditions in an open pit mine. In Rossmanith (ed.) *Mechanics of Jointed and Faulted Rock*., Balkema, Rotterdam: 529 - 535.

Barton N.R. and S.C. Bandis (1990) Review of predictive capabilities of JRC-JCS model in engineering practice. In Barton & Stephansson (eds.) *Rock Joints*, Balkema, Rotterdam: 603 - 610.

Gasc-Barbier, M., A. Ballion and D. Virely (2008) Design of large cuttings in jointed rock, *Bull. Eng. Geology and Environment* (2008) 67:227–235

Goodman RE. and G.H. Shi (1985) *Block Theory and its Application to Rock Engineering*. Wiley: New York.

Hantz D., (1988) Slope Design in Surface Mines *International Journal of Mining, Reclamation and Environment 2(2) :87-92*

Heliot D. (1998) Generating a blocky rock mass. *Int. J. Rock Mech. Min. Sci. & Geomech*. 25(3):127-138.

Hoek E. and J.W. Bray (2001) *Rock Slope Engineering*, Spon Press. 358pp.

Hudson J.A. and S.D. Priest (1983) Discontinuity Frequency in Rock Masses - *Int. J. Rock Mech. Min. Sci. & Geomech*. 20:73 - 89.

Kabbaj R. (1989) Traitement statistique de la fracturation, Etude bibiliographique. Rapport interne INERIS - NANCY 89 (1) 31.71.1111(5).

Martin D.C., D.R. Piteau (1978) Select berm width to contain local failures - E/MJ Operating *Handbook of Surface Mining*, Mc Graw-Hill Inc. New-York.

Ngot Kongolo J.C. (1990) - Stabilite des gradins des exploitations a ciel ouvert, Approche statisque mecanique et probaliste. PhD Thesis INPL-NANCY, 161 pp.

Rode, H. F., R. Hadadou and V. Soukatchoff (1990) Mechanical Behaviour of Joints in Cliffs and Open Pits. in *Rock Joints*, Barton & Stephansson ed., Balkema, Rotterdam.:27-33.

Warburton P.M. (1981) Vector Stability Analysis of an Arbitrary Polyhedral Rock Block with any number of free faces. *International Journal of Rock Mechanics* 18.